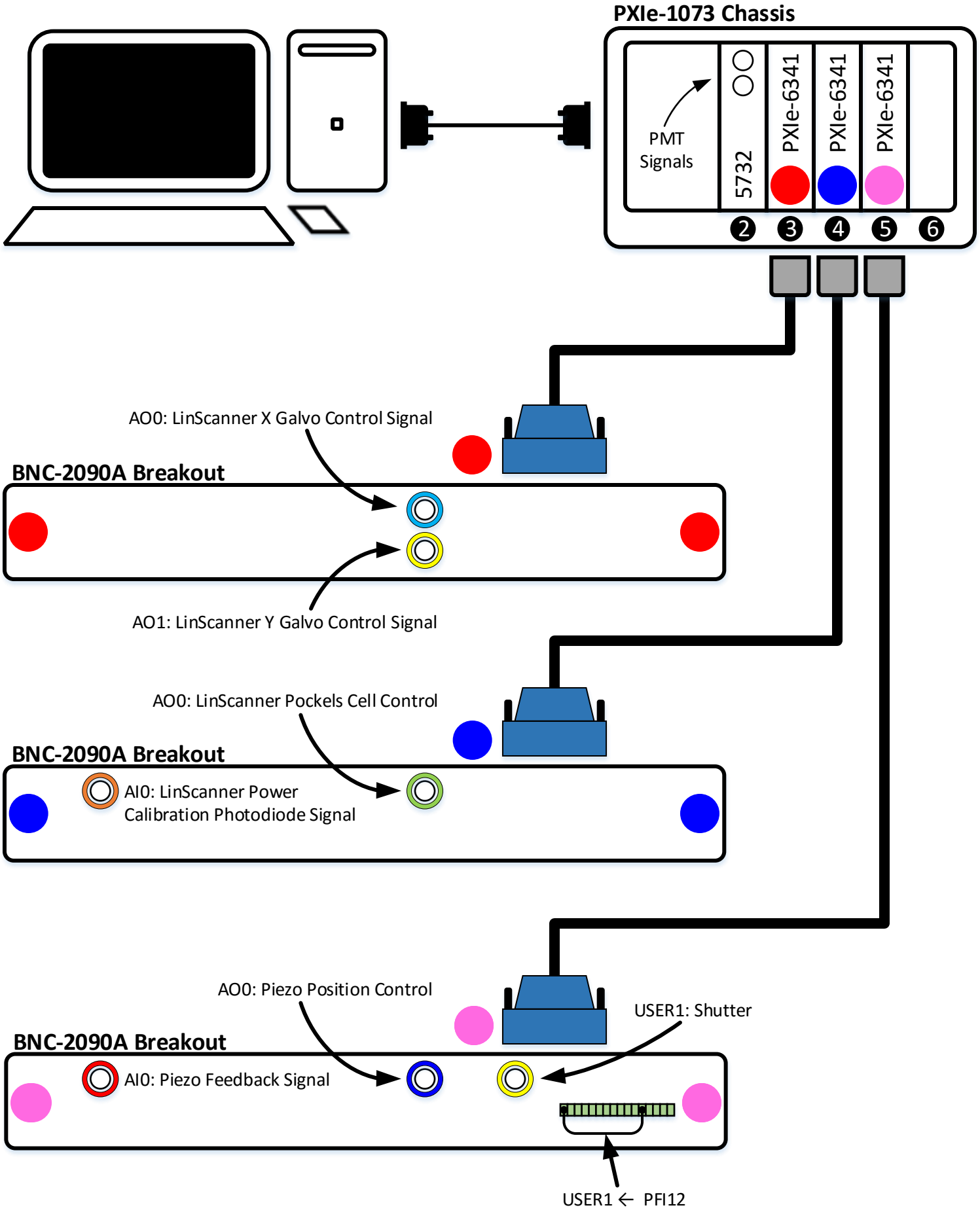ScanImage Wiring Diagram